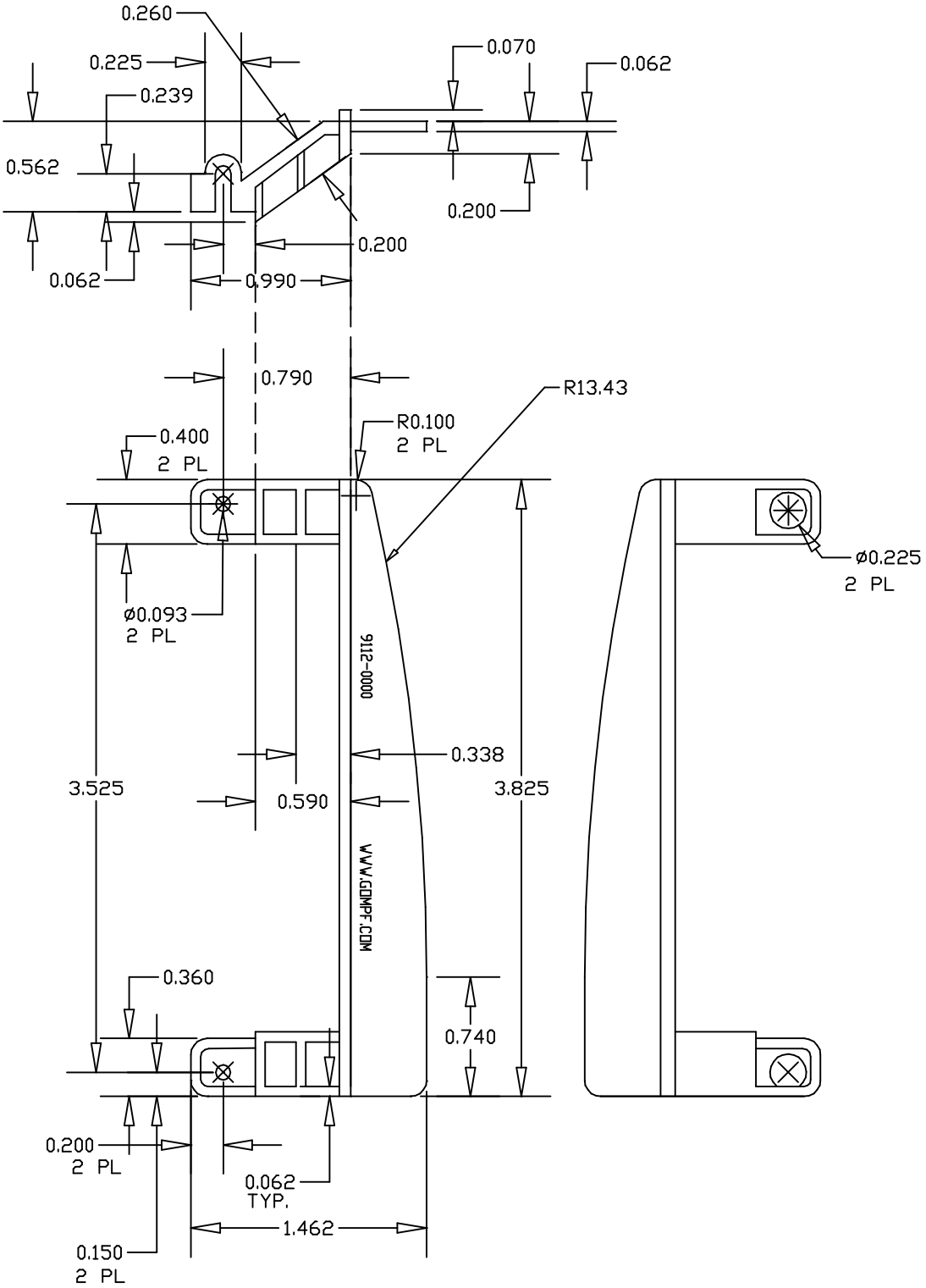

GOMPF BRACKETS, INC.
WWW.BRACKET.COM
sales@bracket.com
Phone: (425) 391-0495
Fax: (425) 391-0496

COPYRIGHT PROTECTED

DWG. NO. 9112-0000

MATERIAL: GRAY UL94V-0 WITH 10% FIBERGLASS

FINISH: GRAY

TOLERANCES:
STD.TOLS.±0.010
RAD.TOLS.±0.010
HOLE TOLS.±0.005
MAT.TOLS.±0.002

SCALE: 1:1

DATE: 3/29/99

REV. 0

CHECKED:

APPROVALS:

DRAWN BY: BF